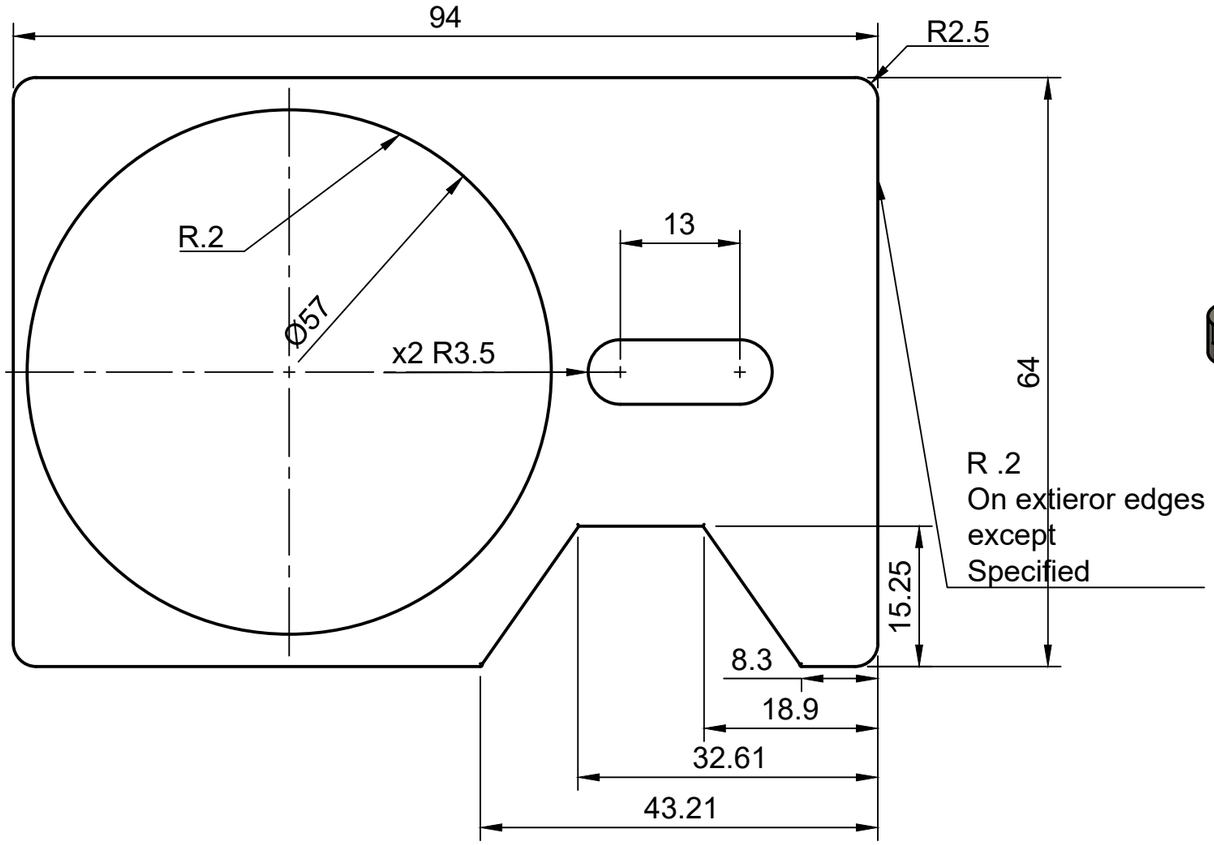

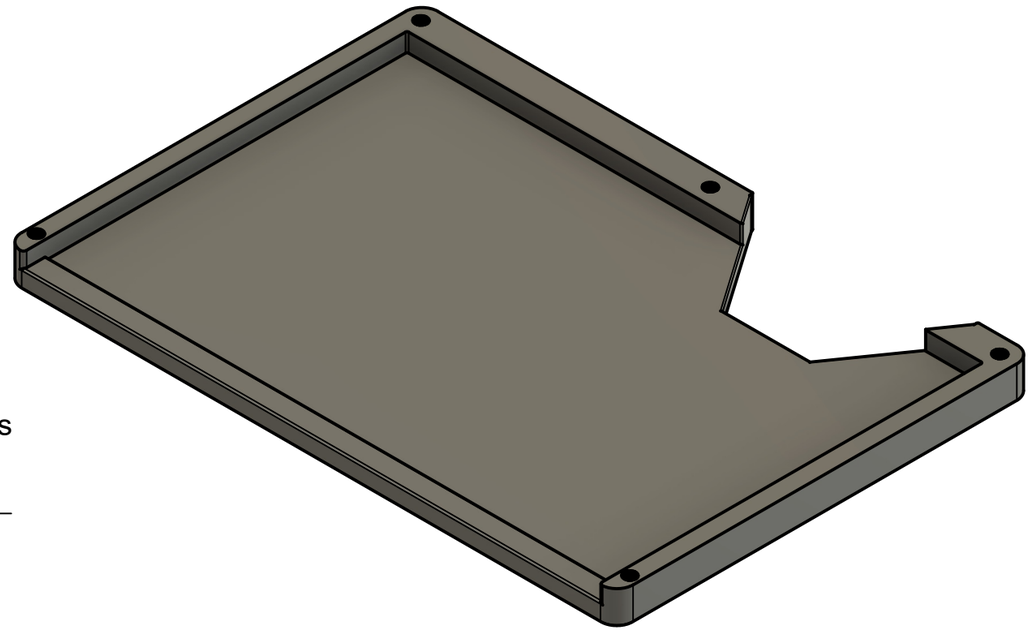

A-A (1.5:1)

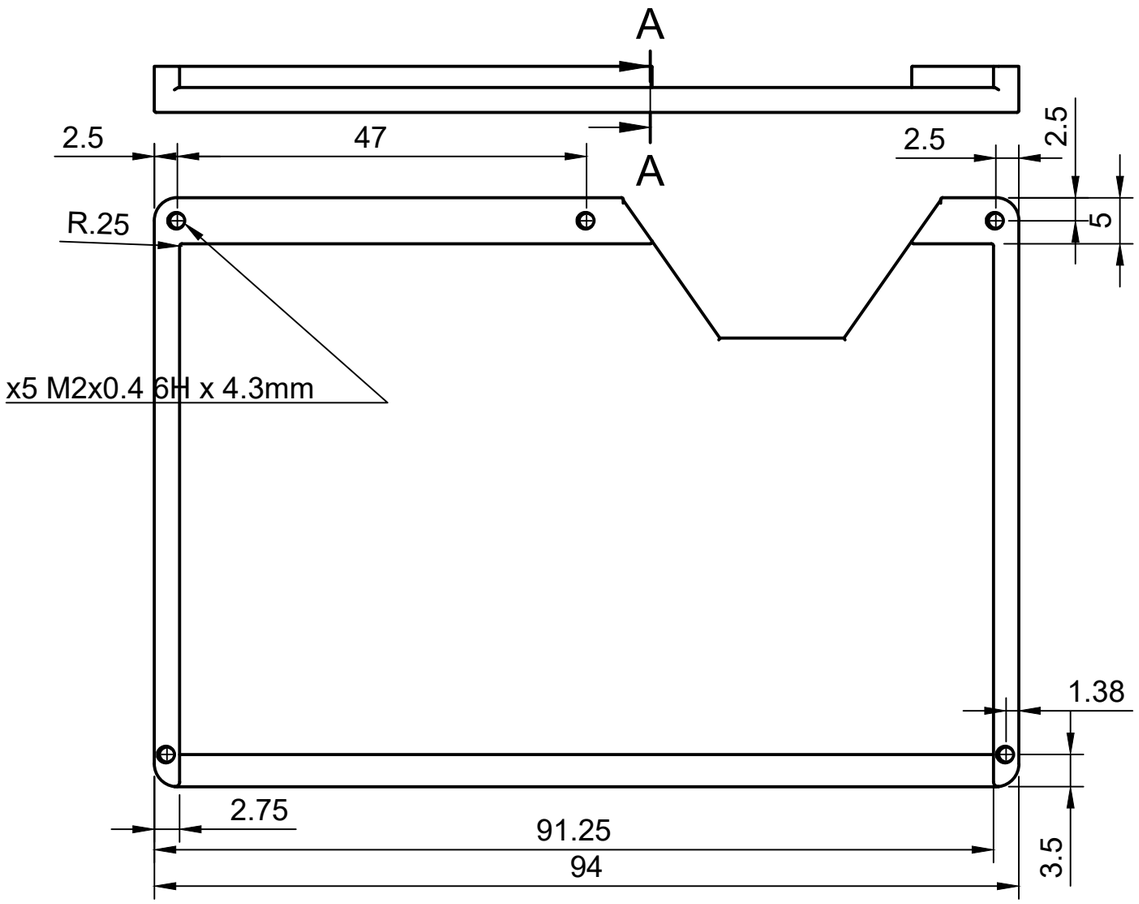

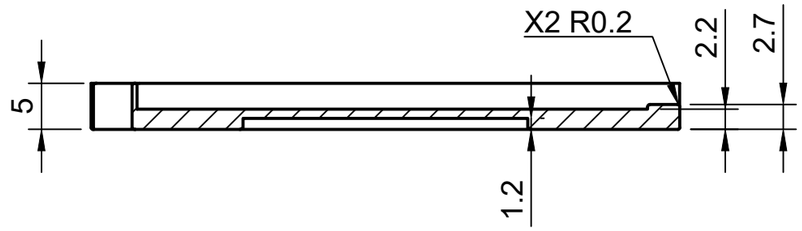

NAME Carter Kiefer	NOTES:
Tolerance +-.01 / Unit mm	Most Exterior edges are filleted R0.2. Depth of both holes on bottom is 1.2mm. Small catch at entance.
DATE 4/3/26	
PART NAME Wallet Bottom	